LUBRICATION SYSTEM

SERVICE TOOLS

Description	Part Number	Page
ADAPTER HOSE	529 035 652	4
ECM ADAPTER TOOL	529 036 166	6
FLUKE 115 MULTIMETER	529 035 868	6
PRESSURE GAUGE	529 035 709	4

SERVICE PRODUCTS

Description	Part Number	Page
LOCTITE 243 (BLUE)	293 800 060	4, 7

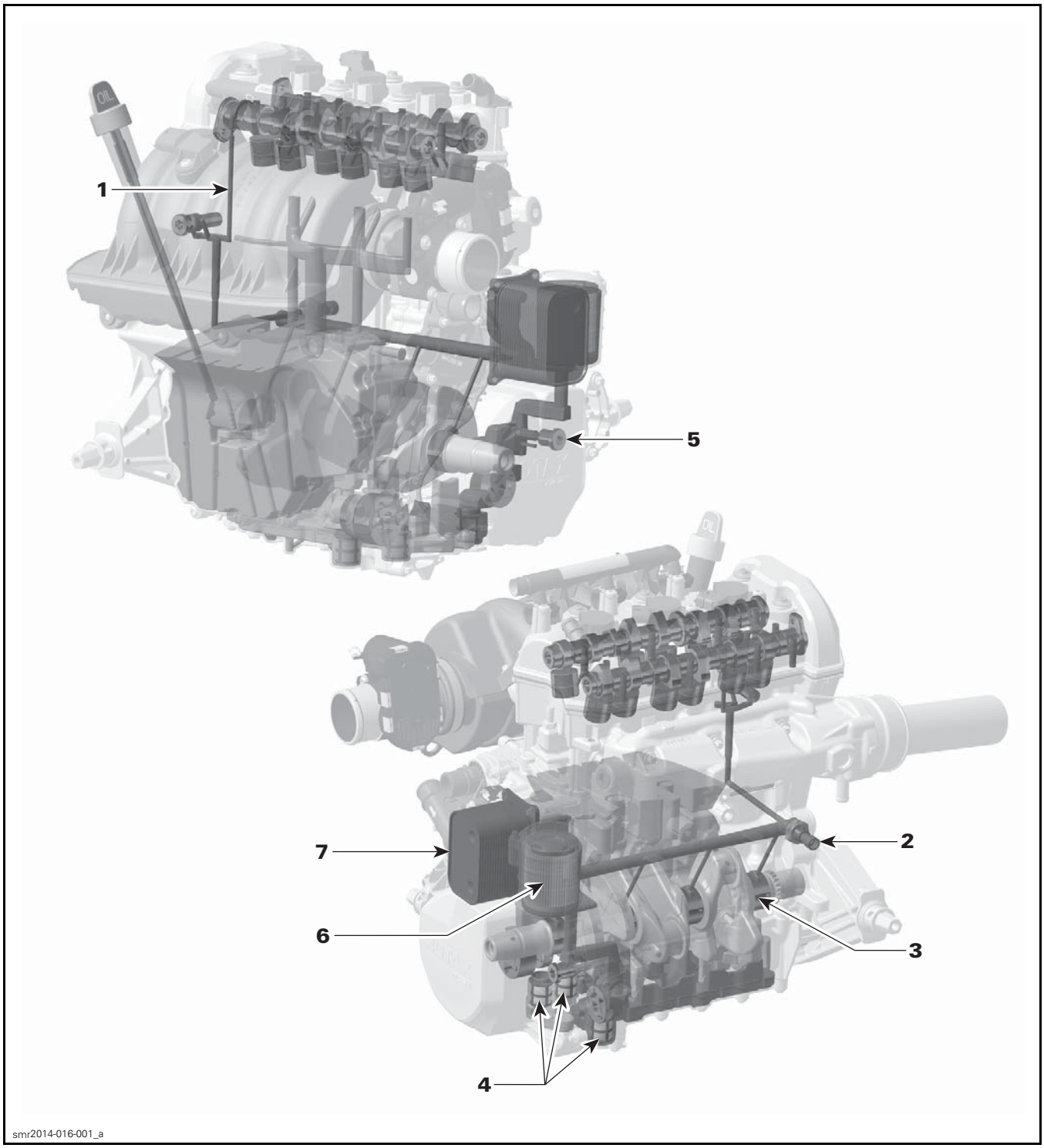

ENGINE LUBRICATION CIRCUIT

1. Oil channel to camshaft bearing
2. Oil pressure switch
3. Crankshaft main bearing
4. Oil strainers
5. Oil pressure regulator
6. Oil filter
7. Oil cooler

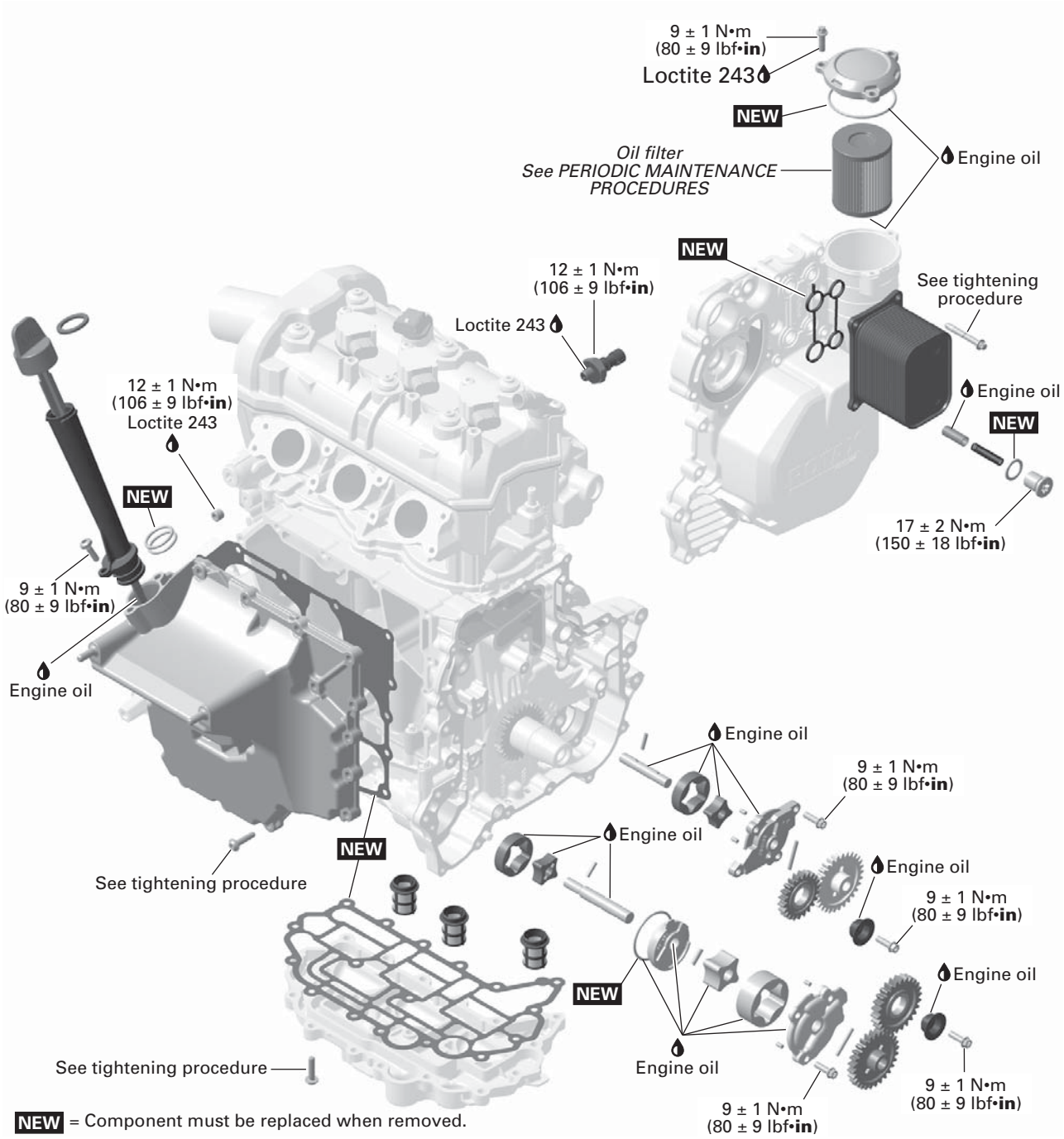

smr2014-016-002_a

GENERAL

SYSTEM DESCRIPTION

This engine uses dry sump lubrication. The oil from the cylinder block, timing chain chamber and magneto cover is pumped by two suction pumps.

Both suction pumps are integrated into one module.

The large 20 mm (.79 in) oil suction pump returns the crankshaft and magneto chamber oil to the reservoir.

The small 11 mm (.43 in) oil suction pump returns the timing chain chamber oil to the oil reservoir.

An oil filter and three oil strainers are used to filter dirt and debris from the oil circuit.

The oil strainers are located between oil sump cover and crankcase underneath the oil pressure pump.

The oil pressure is provided by a pump and regulated by a spring loaded pressure regulator.

INSPECTION

ENGINE OIL PRESSURE

1. Remove central body. Refer to *BODY*.
2. Remove oil pressure test plug screw from cylinder block.

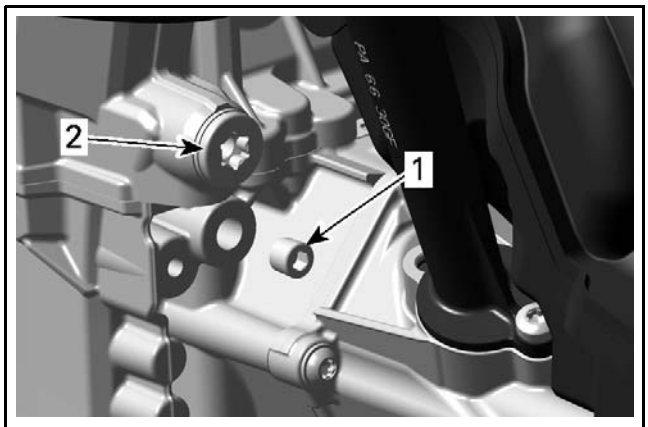

smr2014-016-003_a

1. *Oil pressure test plug screw*
2. *Timing chain tensioner*

3. Install the adapter hose on cylinder block.

REQUIRED TOOLS	
ADAPTER HOSE (P/N 529 035 652)	

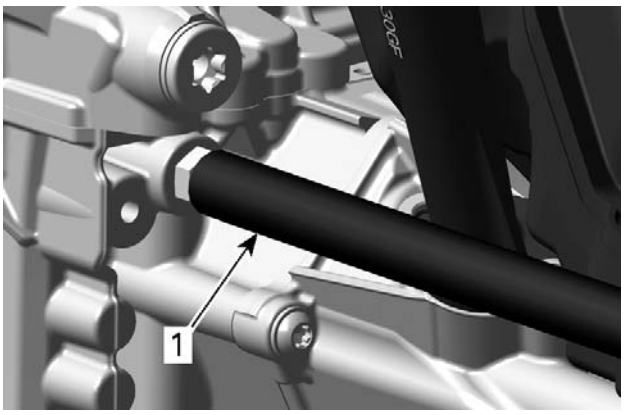

smr2014-016-004_a

1. *Adapter hose*

4. Connect the pressure gauge to adapter hose.

REQUIRED TOOL	
PRESSURE GAUGE (P/N 529 035 709)	

5. Start engine and check the oil pressure.

ENGINE OIL PRESSURE @ 100°C (212°F)	
ENGINE SPEED	MINIMUM PRESSURE
Idle	80 kPa (11.6 PSI)
4000 RPM	270 kPa (39.16 PSI)
6000 to 8000 RPM	350 kPa (50.76 PSI)

If the engine oil pressure is out of specification, refer to *TROUBLESHOOTING* in this subsection.

6. Remove engine oil pressure test tools.
7. Clean threads of oil pressure test plug screw before installing the plug screw.
8. Tighten oil pressure test plug screw to specification.

OIL PRESSURE TEST PLUG SCREW	
Service product	LOCTITE 243 (BLUE) (P/N 293 800 060)
Tightening torque	12 N•m ± 1 N•m (106 lbf•**in** ± 9 lbf•**in**)

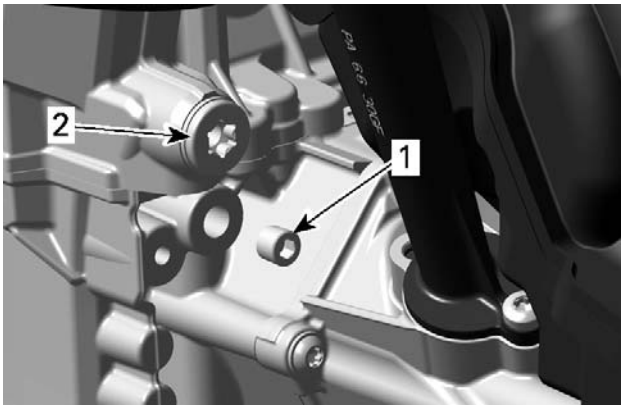

1. *Oil pressure test plug screw*
2. *Timing chain tensioner*

9. Reinstall all removed parts.

TROUBLESHOOTING

Always check for fault codes. If a fault code is detected, service the fault code first.

LOW OR NO ENGINE OIL PRESSURE

1. **Oil level is too low.**
   - *Refill engine oil.*
   - *Check for high oil consumption. See below.*
   - *Check for oil leaks (oil leaking out of leak indicator hole, gaskets, oil seal or O-rings). Repair or replace.*
2. **Defective or clogged oil filter.**
   - *Replace engine oil and filter.*
3. **Use of a bad grade oil.**
   - *Replace engine oil with BRP recommended oil.*
4. **Oil pressure regulator valve sticks open, or spring load is insufficient.**
   - *Clean oil regulator piston and its bore. Replace if necessary.*
   - *Measure spring free length. Replace if out of specification.*
5. **Oil pump(s) worn or damaged.**
   - *Check if oil pump drive gears are damaged. Replace if necessary.*
   - *Check oil pump rotors and its bore for wear limits. Replace if out of specification.*
6. **Engine oil strainer is clogged.**
   - *Remove and clean engine oil strainer.*
7. **Heavy wear on plain bearings.**
   - *Check radial clearance of plain bearings. Replace if out of specification.*

HIGH OIL CONSUMPTION

1. **Oil in breathing system.**
   - *Check if breather V-ring is brittle, hard or damaged. Replace V-ring.*
   - *Check if oil separator cover is damaged or missing.*
2. **Valve stem seals worn or damaged.**
   - *Replace valve stem seals.*
3. **Piston rings worn out (blue colored exhaust smoke).**
   - *Replace piston rings.*

OIL CONTAMINATION (WHITE APPEARANCE)

NOTICE **Inspect and replace engine coolant if contaminated.**

1. **Oil seal and rotary seal on water pump shaft leaking.**
   - *Replace oil seal, rotary seal and water pump shaft. Change engine oil.*
2. **Cylinder head gasket leaking.**
   - *Replace cylinder head gasket. Change engine oil.*
3. **Cylinder head screws not properly tightened.**
   - *Retighten screws with recommended torque. Change engine oil.*
4. **Oil cooler gasket leaking.**
   - *Replace oil cooler gasket. Change engine oil.*
5. **PTO seal leaking.**
   - *Replace PTO seals. Change engine oil.*

PROCEDURES

OPS (OIL PRESSURE SWITCH)

OPS Activation

The oil pressure switch activates when the engine oil pressure is lower than following specified pressure range.

NOTE: ECM does not trigger the OPS signal below 4500 rpm.

OIL PRESSURE SWITCH ACTIVATION RANGE
130 kPa to 170 kPa (18.85 PSI to 24.66 PSI)

OPS Access

1. Remove central body. Refer to *BODY*.

OPS Inspection

First, ensure oil pressure is adequate. Refer to *ENGINE OIL PRESSURE*.

If the oil pressure is good, check the resistance of the oil pressure switch.

OPS Resistance Test

The engine must be warm to check the oil pressure switch properly.

⚠ WARNING

Be careful when working near hot part. To avoid potential burns, never touch exhaust system components immediately after the engine has been running as these components are very hot. Always use long sleeves and gloves.

1. Cut locking tie and disconnect the OPS connector.

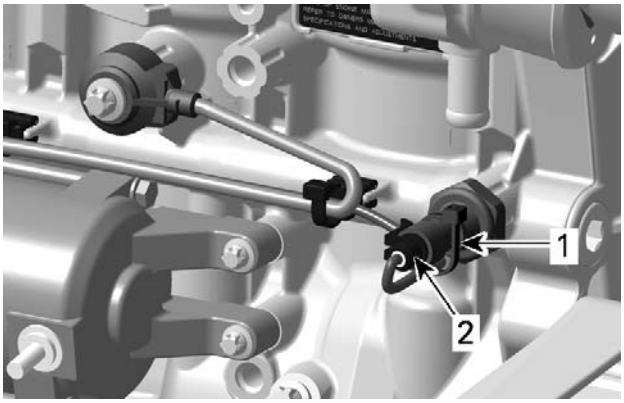

smr2014-016-005_a

UNDER EXHAUST MANIFOLD
1. Locking tie
2. OPS connector

2. Check the oil pressure switch resistance.

REQUIRED TOOL	
FLUKE 115 MULTIMETER (P/N 529 035 868)	

3. Read result and compare to table.

RESISTANCE (Ω)		
ENGINE NOT RUNNING		
OPS pin	Engine ground	Close to 0 Ω (normally closed switch)

If resistance is out of specification, replace the oil pressure switch.

If the resistance is correct, continue procedure. It will be necessary to use jumper wires.

4. Start engine.
5. Read result and compare to table.

RESISTANCE (Ω)		
ENGINE RUNNING		
OPS pin	Engine ground	Infinitely high (OL)

If resistance is out of specification, replace the oil pressure switch.

If the resistance is correct, check the oil pressure switch circuit continuity.

OPS Circuit Continuity Test

1. Disconnect ECM connector A. Refer to *ECM CONNECTOR ACCESS* in *ELECTRONIC FUEL INJECTION)* subsection.
2. Install connector A to the ECM adapter.

REQUIRED TOOL	
ECM ADAPTER TOOL (P/N 529 036 166)	

3. Cut locking tie and disconnect the OPS connector.

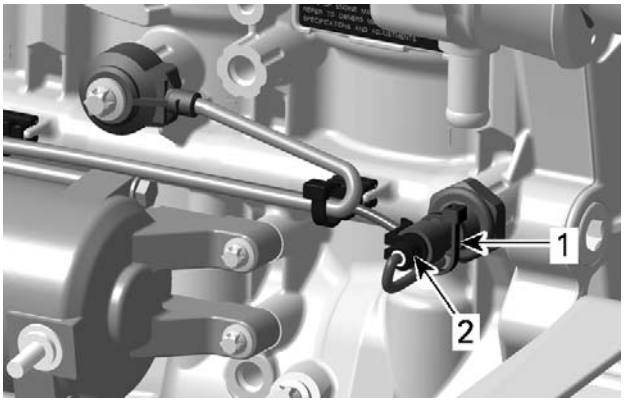

smr2014-016-005_a

1. Locking tie
2. OPS connector

4. Check continuity as follows.

REQUIRED TOOL	
FLUKE 115 MULTIMETER (P/N 529 035 868)	

CIRCUIT CONTINUITY		
OPS connector	ECM A pin E3	Close to 0 Ω

If the continuity is good and all other tests, try a **NEW** ECM.

If the continuity is bad, repair or replace defective wire or connectors.

OPS Removal

1. Cut locking tie and unplug the OPS switch connector.

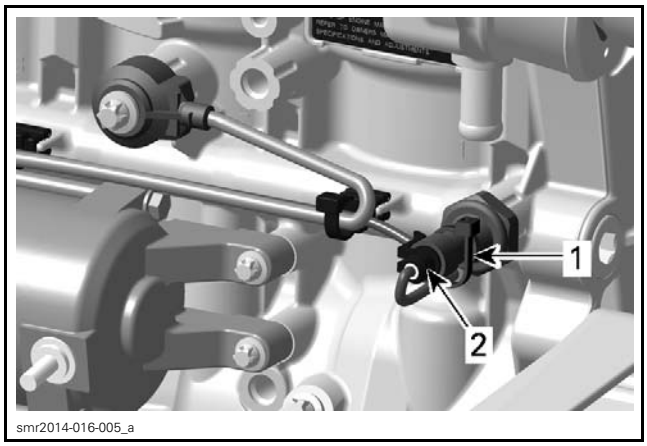

1. Locking tie
2. OPS connector

2. Unscrew and remove the OPS.

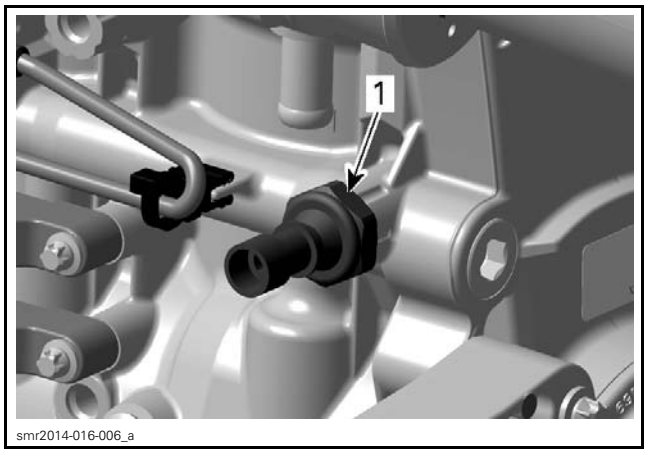

1. Oil pressure switch

OPS Installation

Install oil pressure switch as per the following informations.

OIL PRESSURE SWITCH	
Service product	LOCTITE 243 (BLUE) (P/N 293 800 060)
Tightening torque	12 N•m ± 1 N•m (106 lbf•**in** ± 9 lbf•**in**)

Install all other removed parts.

NOTICE **When installing the locking tie on the OPS connector, take care that the wires do not make a sharp bend.**

OIL FILLER TUBE

Oil Filler Tube Removal

1. Remove intake manifold, refer to *AIR INTAKE SYSTEM* subsection.
2. Remove the oil filler tube retaining screw.

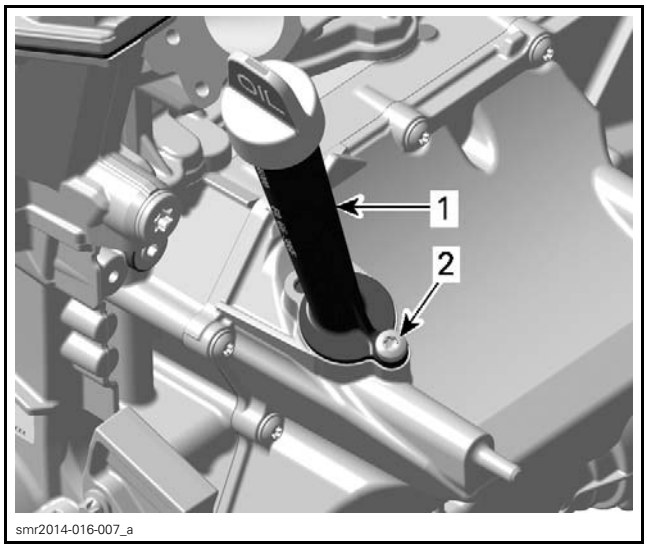

1. Oil filler tube
2. Retaining screw

3. Pull filler tube out of the oil tank cover.

Oil Filler Tube Installation

1. Install **NEW** O-rings on the oil filler tube.

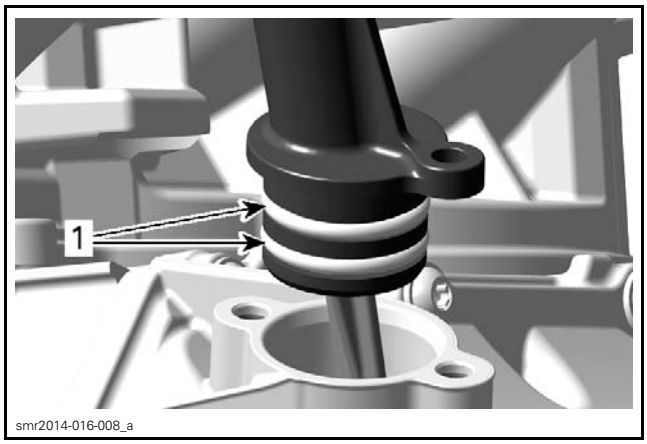

1. Oil filler tube O-rings

2. Lubricate the oil tank cover bore with engine oil.

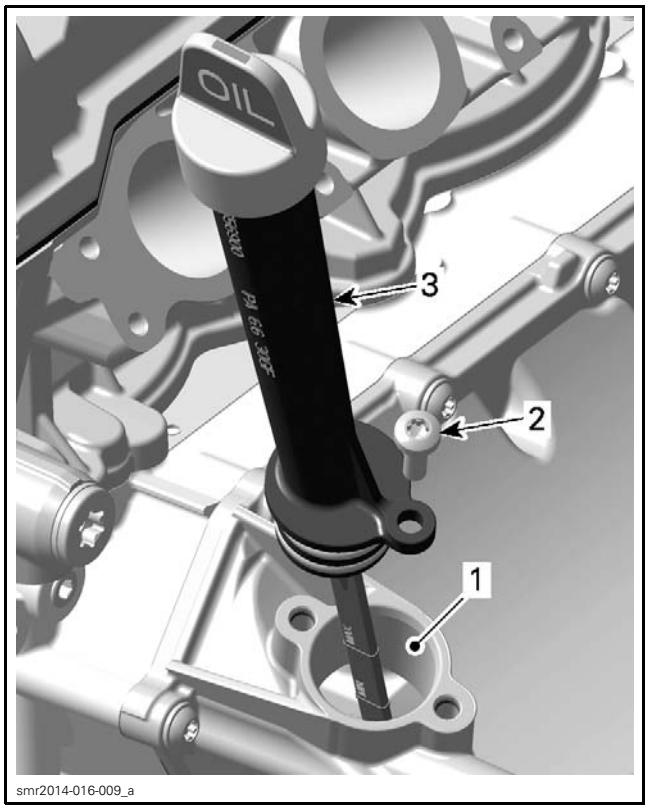

1. Lubricate the oil tank cover bore
2. Retaining screw
3. Oil filler tube

3. Install the oil filler tube.
4. Tighten retaining screw to the specified torque.

OIL FILLER TUBE SCREW	
Tightening torque	9 N•m ± 1 N•m (80 lbf•**in** ± 9 lbf•**in**)

5. Install all other removed parts.

OIL TANK

Oil Tank Cover Removal

1. Drain engine oil. Refer to *PERIODIC MAINTENANCE PROCEDURES* subsection.
2. Remove the engine from vehicle. Refer to *ENGINE REMOVAL AND INSTALLATION* subsection.
3. Remove intake manifold. Refer to *AIR INTAKE SYSTEM* subsection.
4. Place a drain pan underneath oil tank.
5. Unscrew oil tank cover retaining screws.

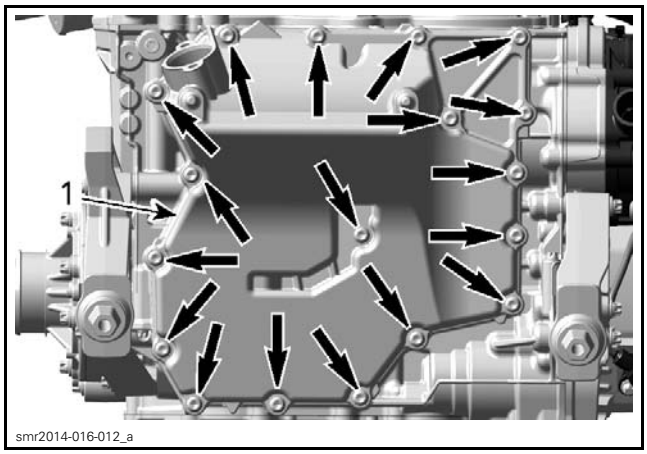

RETAINING SCREWS
1. Oil tank

6. Remove oil tank from the engine.

Oil Tank Cover Installation

1. Install **NEW** gasket.
2. Install the oil tank on the engine, then tighten screws in two steps as follows:
   2.1 Tighten the following screws to the specified torque and sequence.

OIL TANK SCREWS TIGHTENING TORQUE (FOLLOW SEQUENCE)	
STEP A	5 N•m ± 0.6 N•m (44 lbf•**in** ± 5 lbf•**in**)

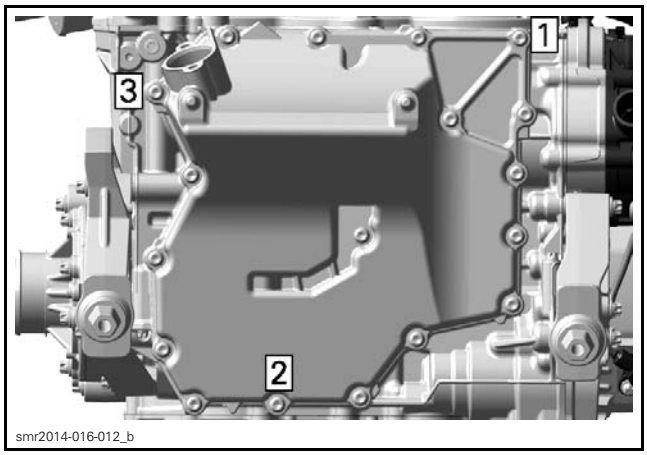

TIGHTENING SEQUENCE STEP A

   2.2 Tighten the following screws to the specified torque and sequence.

OIL TANK SCREWS TIGHTENING TORQUE (FOLLOW SEQUENCE)	
STEP B	
	9 N•m ± 1 N•m (80 lbf•**in** ± 9 lbf•**in**)

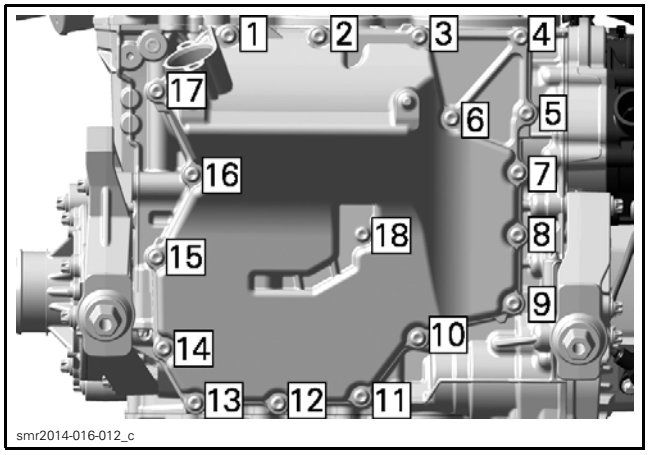

TIGHTENING SEQUENCE STEP B

3. Wipe off any oil spillage.
4. Install the engine in the vehicle. Refer to *ENGINE REMOVAL AND INSTALLATION* subsection.
5. Install intake manifold. Refer to *AIR INTAKE SYSTEM* subsection.
6. Fill up oil tank and check oil level. Refer to *PERIODIC MAINTENANCE PROCEDURES* subsection.

OIL COOLER

Oil Cooler Access

1. Remove central body. Refer to *BODY*.

Oil Cooler Removal

1. Refer to *PERIODIC MAINTENANCE PROCEDURES* subsection to:
   – Drain engine oil
   – Drain cooling system.
2. Remove oil cooler retaining screws.

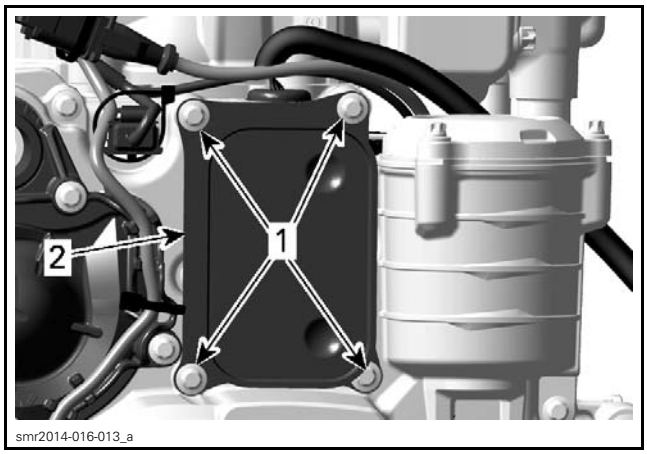

1. *Retaining screws*
2. *Oil cooler*

3. Place rags or towels under oil cooler to catch remaining oil and coolant.
4. Remove oil cooler and its gasket.

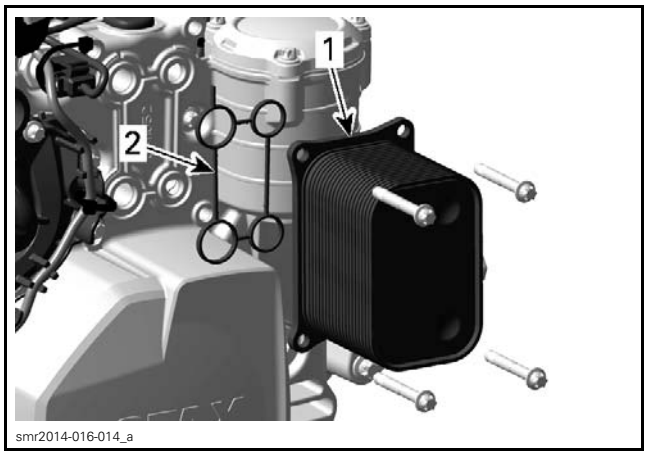

1. *Oil cooler*
2. *Gasket*

Oil Cooler Inspection

Check oil cooler for cracks and other damage.

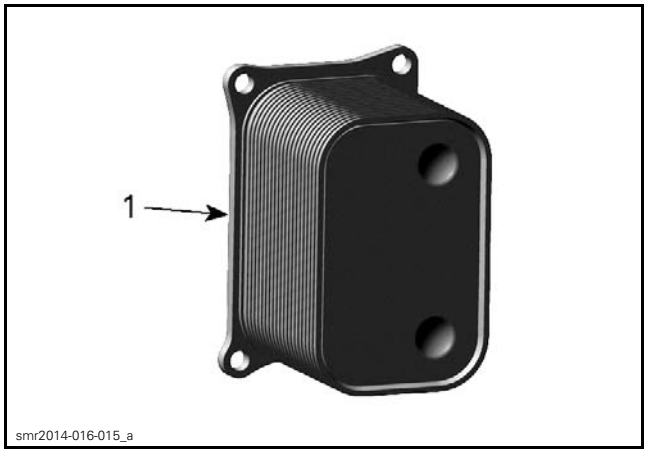

1. *Check for cracks*

Replace parts as necessary.

Oil Cooler Installation

For installation, reverse the removal procedure. However, pay attention to the following.

Tighten oil cooler screws in two steps to the specified torque following the illustrated sequence.

TIGHTENING TORQUE		
OIL COOLER SCREWS	STEP A	5 N•m ± 0.6 N•m (44 lbf•**in** ± 5 lbf•**in**)
	STEP B	9 N•m ± 1 N•m (80 lbf•**in** ± 9 lbf•**in**)

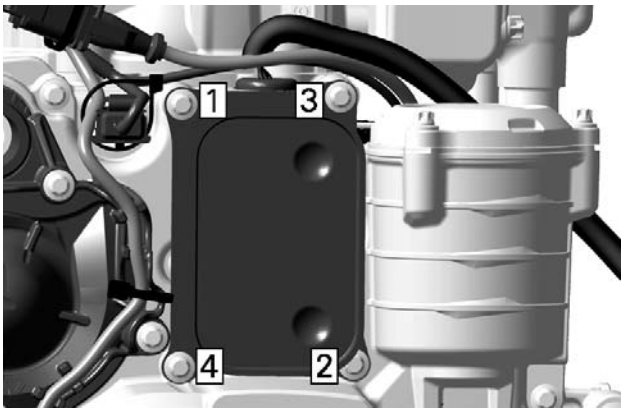

smr2014-016-013_b

TIGHTENING SEQUENCE OIL-COOLER

Wipe off any oil and coolant spillage.

Refer to *PERIODIC MAINTENANCE PROCEDURES* subsection for following procedures:

– Fill up oil tank and check oil level.
– Refill and bleed cooling system.

ENGINE OIL PRESSURE REGULATOR

Oil Pressure Regulator Location

The engine oil pressure regulator is located inside the magneto cover.

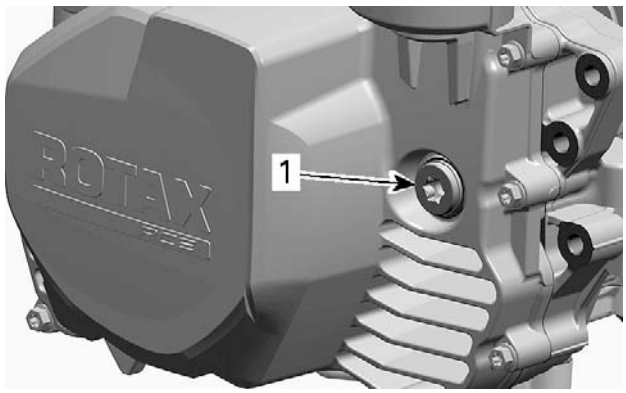

mmr2011-070-022_a

1. *Engine oil pressure regulator location*

Oil Pressure Regulator Access

Remove central body. Refer to *BODY*.

Oil Pressure Regulator Removal

1. Drain engine oil. Refer to *PERIODIC MAINTENANCE PROCEDURES* subsection.
2. Remove regulator plug and sealing washer. Discard sealing washer.
3. Pull oil pressure regulator parts out of the magneto cover.

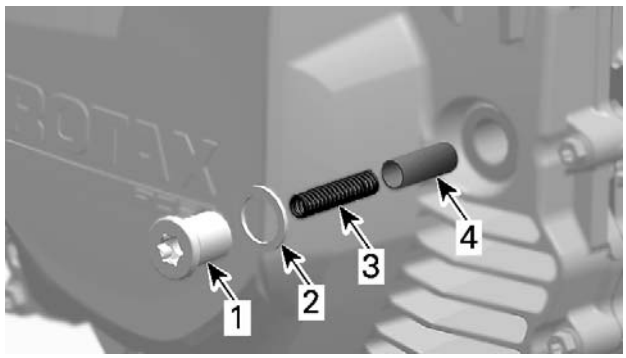

mmr2012-133-003_a

1. *Plug*
2. *Sealing washer*
3. *Regulator spring*
4. *Regulator piston*

Oil Pressure Regulator Inspection

Clean bore and thread in the magneto cover from any contamination.

Inspect oil pressure regulator piston and its bore in cylinder block for scoring or other damages.

Check if piston moves easily in its bore.

Check compression spring for free length.

SPRING FREE LENGTH	
NEW NOMINAL	46 mm (1.811 in)
SERVICE LIMIT	45 mm (1.772 in)

Visually check compression spring for squareness.

Replace worn or damaged components.

Oil Pressure Regulator Installation

For installation, reverse the removal procedure. However, pay attention to the following.

Install a **NEW** sealing washer on plug.

Tighten regulator plug to the specified torque.

OIL PRESSURE REGULATOR PLUG	
Sealing washer	NEW
Tightening torque	17 N•m ± 2 N•m (150 lbf•**in** ± 18 lbf•**in**)

Wipe off any oil spillage.

Fill up oil tank and check oil level. Refer to *PERIODIC MAINTENANCE PROCEDURES* subsection.

Install all other removed parts.

OIL PUMP DRIVE GEARS

Oil Pump Drive Gear Location

The oil pump gears are located on the MAG side, behind the magneto cover.

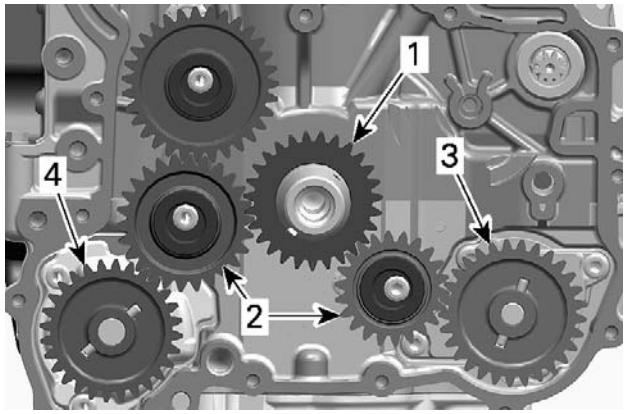

mmr2011-070-024_a

1. *Oil pump drive gear*
2. *Intermediate gears*
3. *Oil pressure pump gear*
4. *Oil suction pump gear*

Oil Pump Drive Gear Access

Refer to *MAGNETO SYSTEM* subsection to remove:

– Magneto cover
– Rotor
– Sprag clutch gear.

Oil Pump Drive Gear Removal

1. Unscrew oil pump intermediate gear screws.

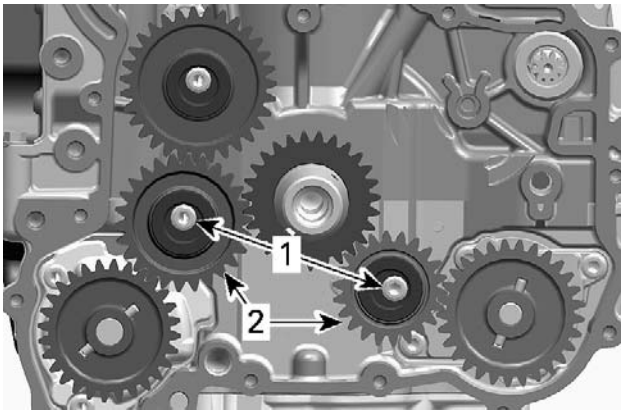

mmr2011-070-024_b

1. *Retaining screws*
2. *Intermediate gears*

2. Remove bearing sleeves and oil pump intermediate gears.

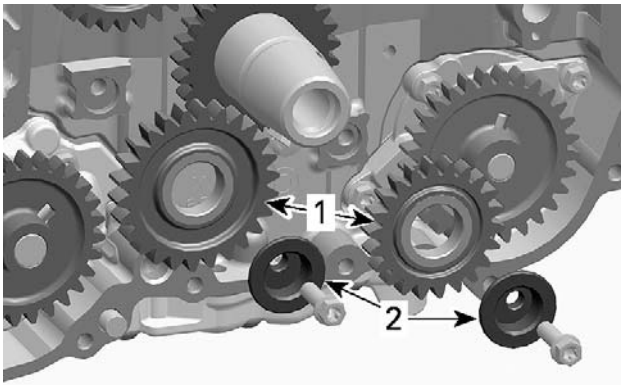

mmr2011-070-026_a

1. *Intermediate gears*
2. *Bearing Sleeves*

3. Remove oil pump gears and needle pins.

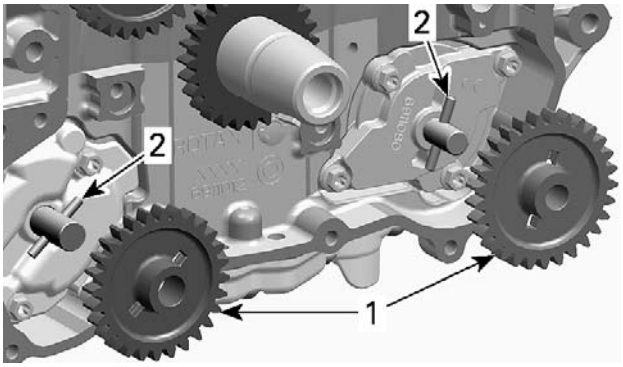

mmr2011-070-027_a

1. *Oil pump gears*
2. *Needle pins*

Oil Pump Drive Gear Inspection

Inspect gears for wear, cracks or other damage.

Replace if damaged.

Oil Pump Drive Gear Installation

For installation, reverse the removal procedure, however, pay attention to the following.

1. Ensure not to mix up the oil pump gears, see next illustration.
   1.1 Install the BROWN oil pump gear (29 teeth) on oil pressure pump.
   1.2 Install the BLACK oil pump gear (28 teeth) on oil suction pump.

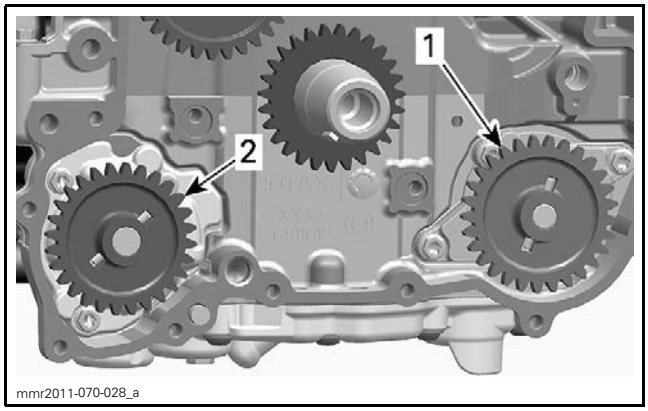

1. BROWN oil pump gear - 29 teeth
2. BLACK oil pump gear - 28 teeth

2. Lubricate intermediate gears bearing sleeves with engine oil, then install gears.
3. Install all other removed parts.
4. Fill up oil tank and check oil level. Refer to *PERIODIC MAINTENANCE PROCEDURES* subsection.

OIL PRESSURE PUMP

Oil Pressure Pump Location

The oil pressure pump is located in the cylinder block, behind the magneto cover.

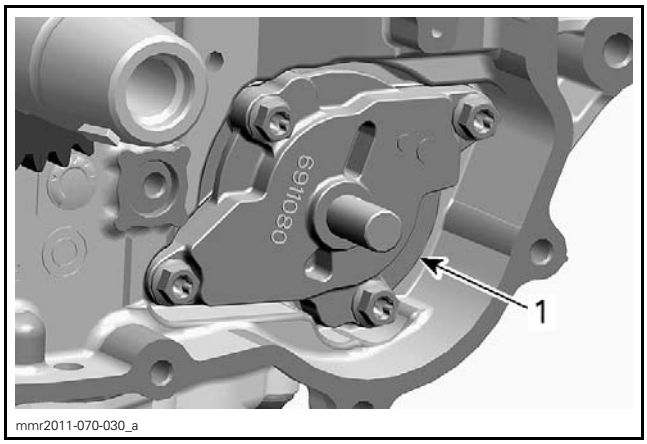

1. Oil pressure pump

Oil Pressure Pump Removal

1. Remove *OIL PUMP DRIVE GEARS*, see procedure in this subsection.
2. Remove oil pump cover.

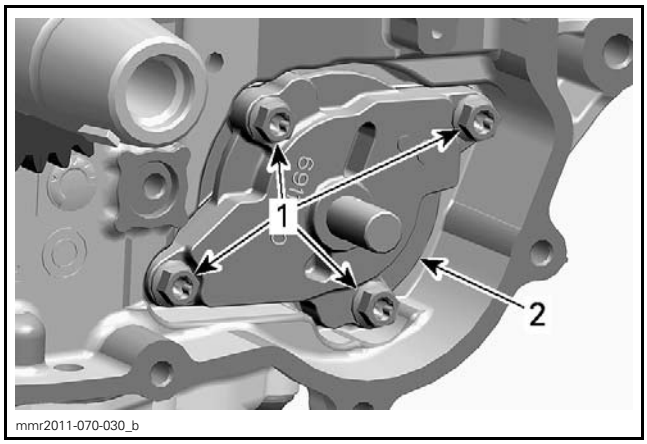

1. Retaining screws
2. Oil pump cover

3. Remove the following parts.

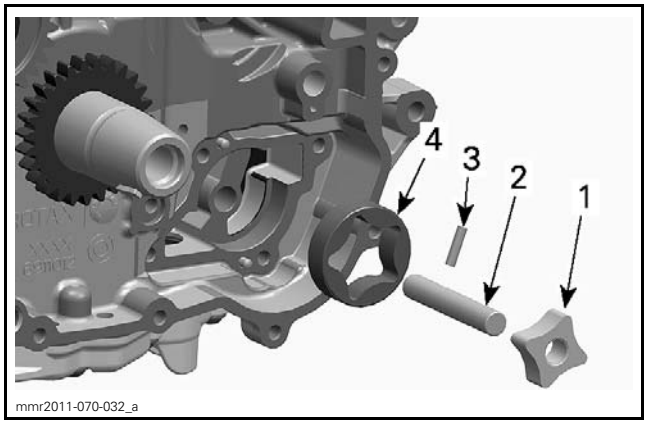

1. Inner rotor
2. Oil pump shaft
3. Needle pin
4. Outer rotor

Oil Pressure Pump Inspection

Inspect oil pump and oil pump cover bore for marks, scratches or other damage. Replace any damaged parts.

Check oil pump cover for damages and for surface straightness with a straight edge.

Check inner rotor for corrosion, worn pin slots or other damages. If so, replace inner and outer rotor at the same time.

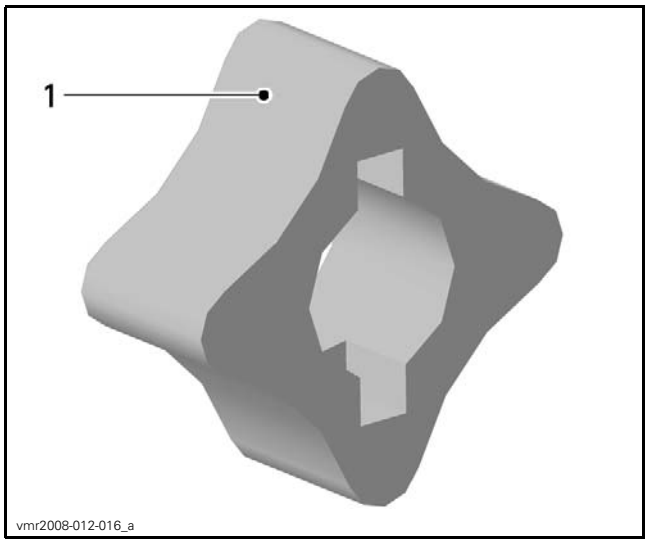

1. Pitting on the teeth

Radial Clearance

Using a feeler gauge, measure the clearance of outer rotor and inner rotor where shown with the arrows.

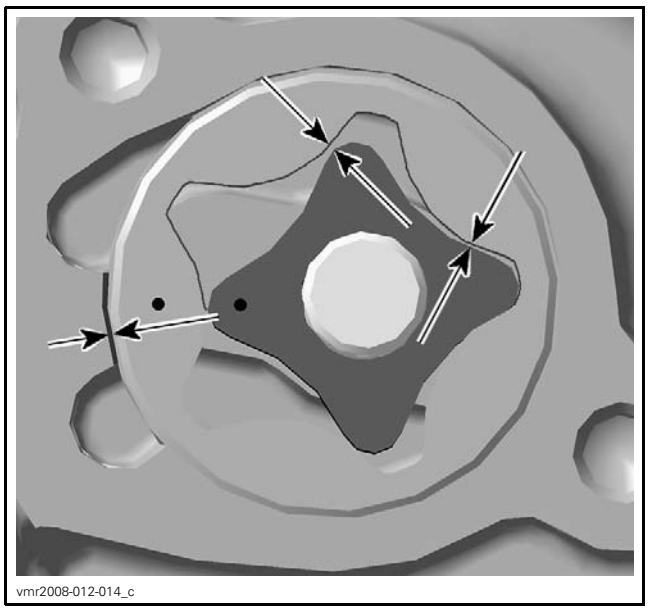

OIL PUMP RADIAL CLEARANCE	
SERVICE LIMIT	0.25 mm (.0098 in)

NOTE: If clearance of inner and outer rotors exceeds the tolerance, replace oil pump.

Axial Clearance

Measure outer rotor thickness with a micrometer.

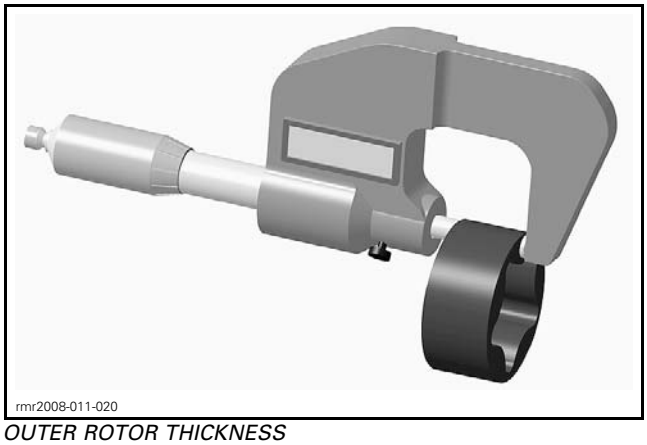

OUTER ROTOR THICKNESS

Using a depth gauge, measure the depth of oil pump bore in the lower crankcase.

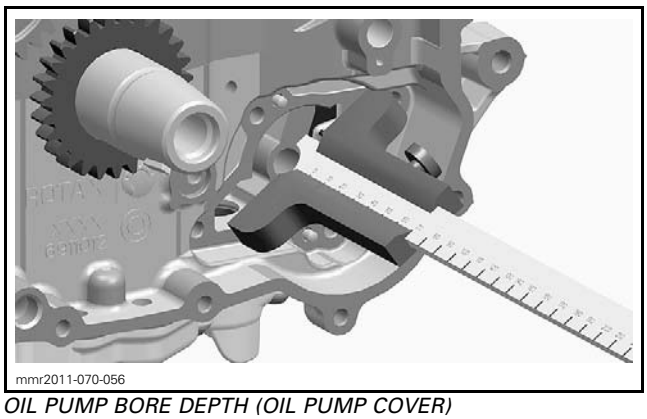

OIL PUMP BORE DEPTH (OIL PUMP COVER)

Substract bore depth from rotor thickness to obtain axial clearance.

OIL PUMP AXIAL CLEARANCE	
SERVICE LIMIT	0.15 mm (.0059 in)

NOTE: When the axial clearance of the oil pump assembly increases, the oil pressure decreases.

Oil Pressure Pump Installation

For installation, reverse the removal procedure, however, pay attention to the following.

1. Lubricate outer rotor with engine oil.

NOTICE **Install rotors with the marks outwards.**

2. Install outer rotor into crankcase oil pump bore.

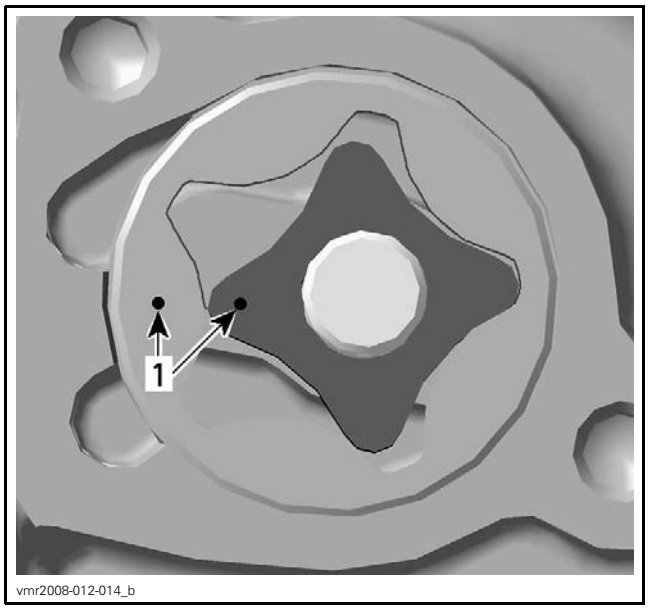

TYPICAL
1. Marks on inner and outer rotor

3. Install needle pin in oil pump shaft.

NOTICE **The oil pump shaft is not symmetrical, the longer side must be installed inward.**

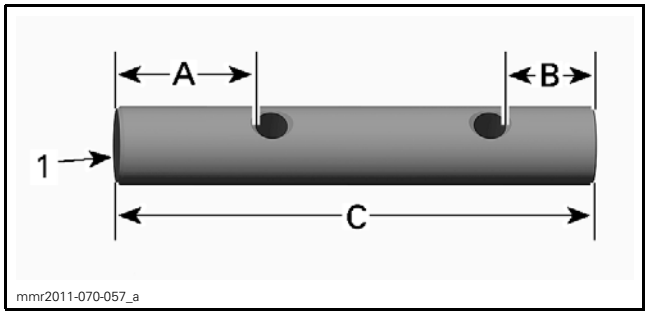

1. Towards engine
A. 16.96 mm (.67 in)
B. 11.43 mm (.45 in)
C. 60.5 mm (2.38 in)

4. Place inner rotor onto the oil pump shaft. Lubricate oil pump shaft and inner rotor with engine oil.
5. Install oil pump shaft assembly into the crankcase.

After installation of the remaining parts, check for smooth operation of the oil pump assembly and axial play of the oil pump shaft.

6. Fill up oil tank and check oil level. Refer to *PERIODIC MAINTENANCE PROCEDURES* subsection.

Start engine and make sure oil pressure is within specifications (refer to *ENGINE OIL PRESSURE* in this subsection).

OIL SUCTION PUMP MODULE

Oil Suction Pump Module Location

The oil suction pump module is located in the cylinder block, behind the magneto cover.

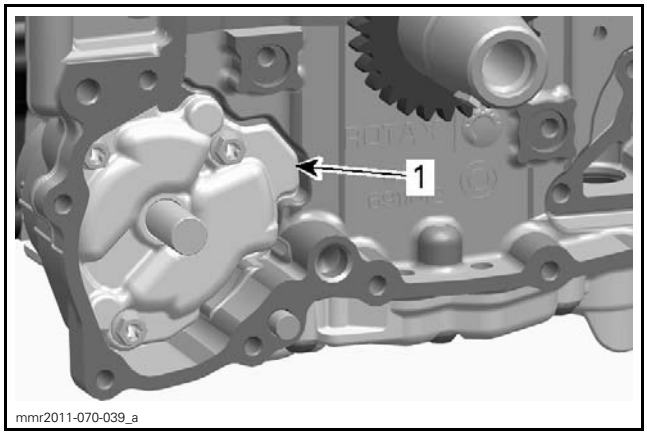

1. Oil suction pump module

Oil Suction Pump Module Disassembly

1. Remove *OIL PUMP DRIVE GEARS*, see procedure in this subsection.
2. Remove oil pump module cover.

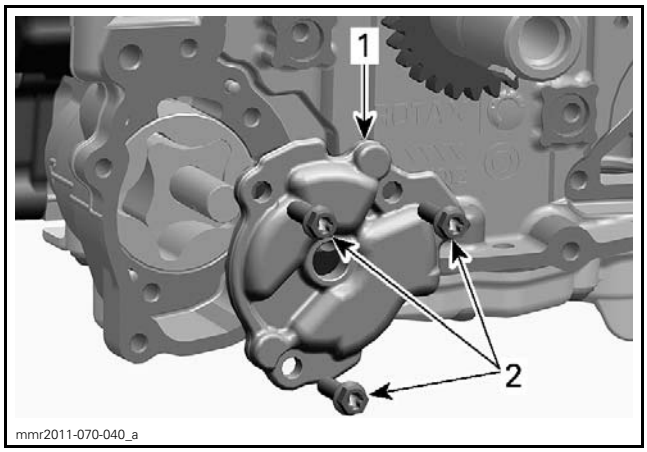

1. Oil pump module cover
2. Retaining screws

3. Disassemble the large oil suction pump as shown.

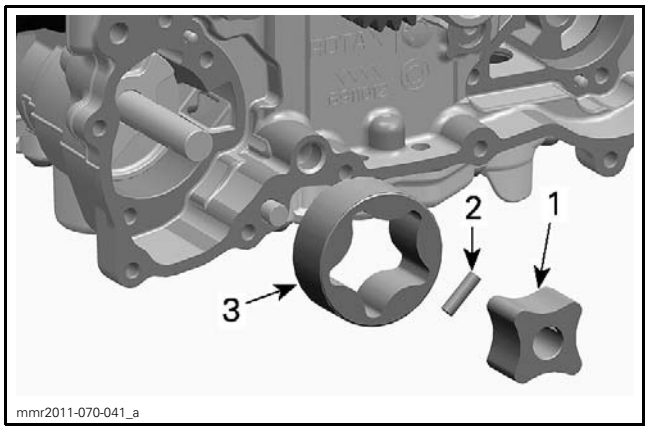

1. *Inner rotor*
2. *Needle pin*
3. *Outer rotor*

4. Disassemble the small oil suction pump as shown.

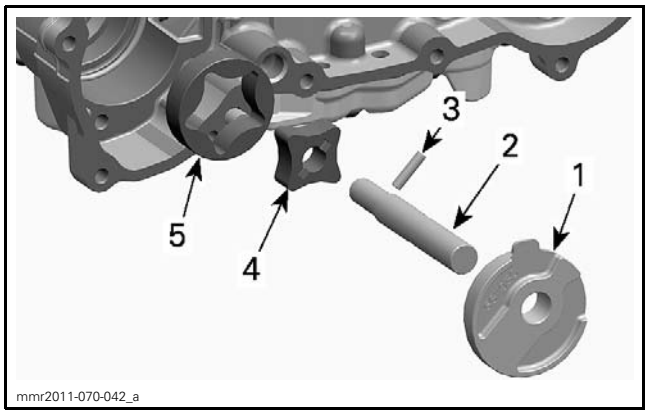

1. *Oil pump cover*
2. *Oil pump shaft*
3. *Needle pin*
4. *Inner rotor*
5. *Outer rotor*

5. Remove and discard the oil pump cover O-ring.

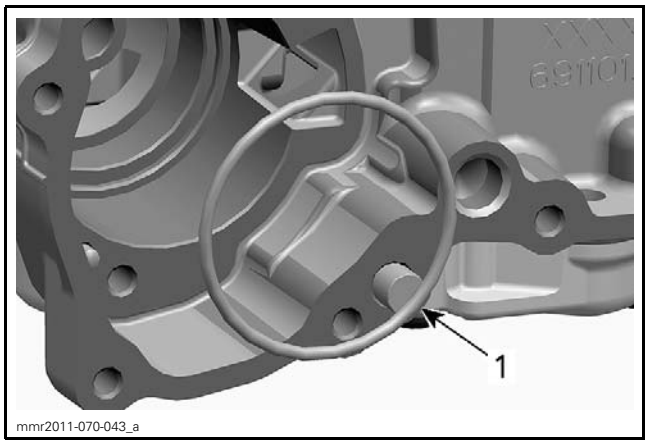

1. *Oil pump cover O-ring*

Oil Suction Pumps Inspection

The inspection of both oil suction pumps is the same as for the oil pressure pump. Refer to *OIL PRESSURE PUMP* in this subsection.

Oil Suction Pump Module Assembly

For installation, reverse the removal procedure, however, pay attention to the following.

1. Lubricate small oil suction pump outer rotor with engine oil.

NOTICE **When installing the oil pump rotors, make sure both marks are pointing toward the inside of the crankcase.**

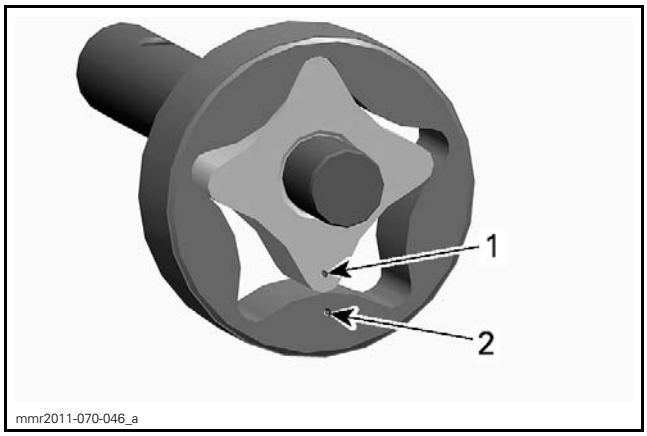

1. *Mark on inner rotor*
2. *Mark on outer rotor*

2. Install small oil suction pump outer rotor into crankcase oil pump bore.

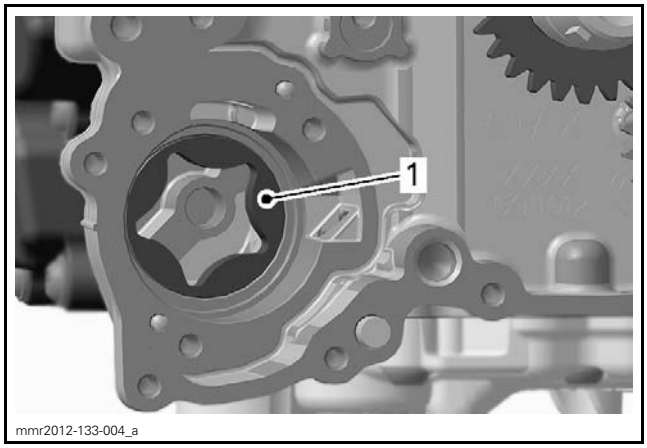

1. *Small oil suction pump outer rotor*

3. Install needle pin in bore of the oil pump shaft and place the small inner rotor on the shaft.

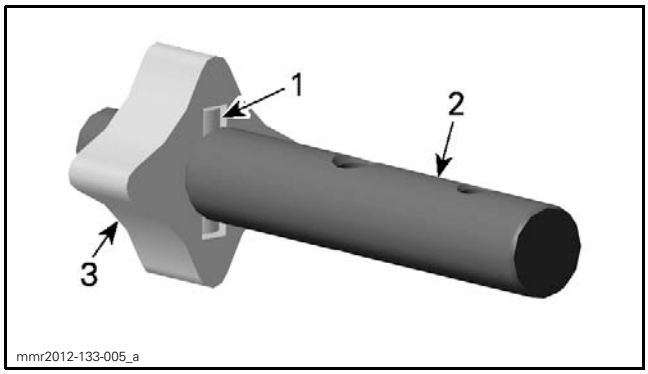

1. *Needle pin*
2. *Oil pump shaft*
3. *Small suction pump inner rotor*

4. Lubricate oil pump shaft and inner rotor with engine oil.
5. Install oil pump shaft assembly into the crankcase.

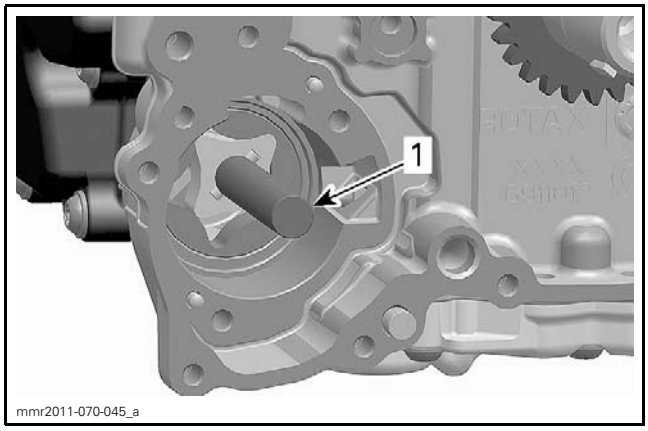

1. *Oil pump shaft with small oil suction pump*

6. Install a **NEW** oil pump cover O-ring.

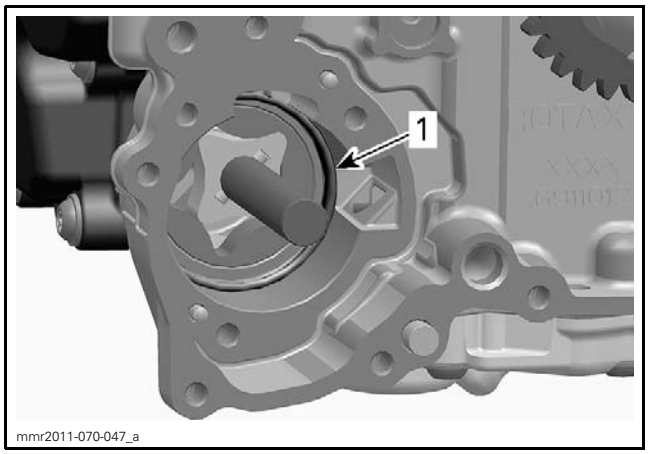

1. *Oil pump cover O-ring*

7. Lubricate both sides of the oil pump cover with engine oil.
8. Align tab of the oil pump cover with the upper recess in the crankcase. Push cover in until a click is heard, indicating the cover is properly installed.

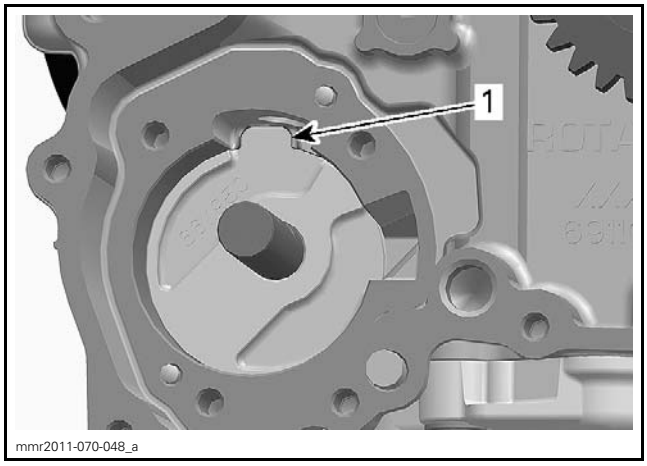

1. *Oil pump cover tab properly positioned*

9. Install large oil suction pump needle pin.
10. Install large oil suction pump inner rotor and outer rotor with the marks outwards.

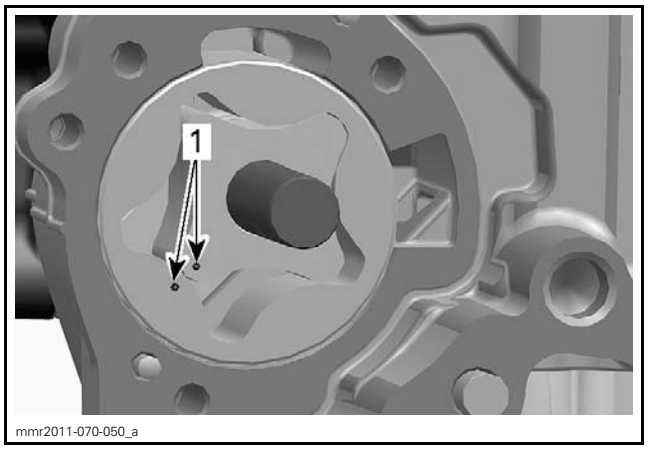

1. *Marks on inner and outer rotor*

11. Lubricate large oil suction pump parts with engine oil.
12. Install other removed parts.

After installation is complete, check for smooth operation of the oil pump assembly and axial play of the oil pump shaft.

13. Fill up oil tank and check oil level. Refer to *PERIODIC MAINTENANCE PROCEDURES* subsection.

Start engine and make sure oil pressure is within specifications (refer to *ENGINE OIL PRESSURE* in this subsection).

OIL SUMP COVER

Oil Sump Cover Location

The oil sump cover is located on the engine bottom.

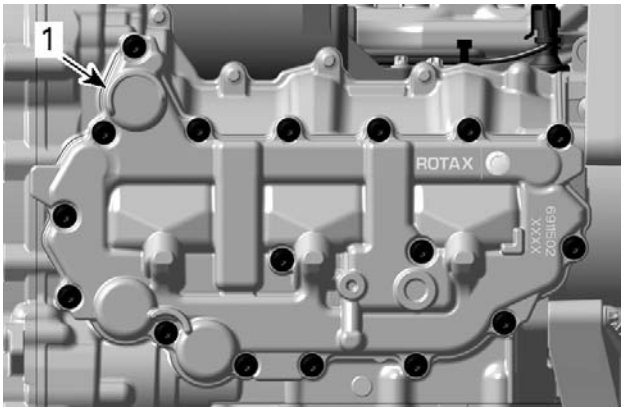

BOTTOM OF ENGINE
1. *Oil sump cover*

Oil Sump Cover Access

Remove engine from vehicle. Refer to *ENGINE REMOVAL AND INSTALLATION* subsection.

Oil Sump Cover Removal

1. Drain engine oil, refer to *PERIODIC MAINTENANCE PROCEDURES* subsection.
2. Unscrew oil sump cover retaining screws.
3. Remove oil sump cover. Discard gasket.

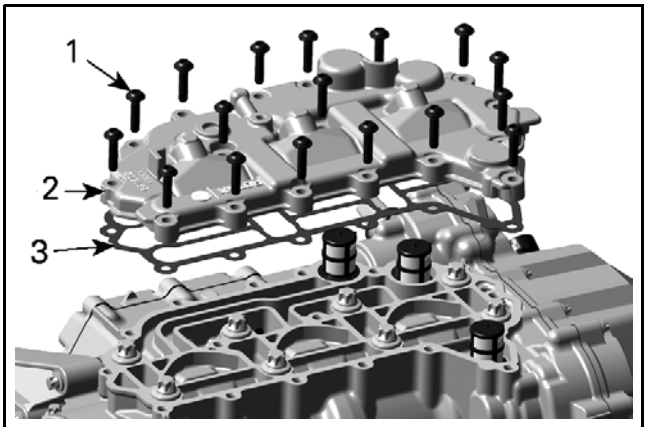

1. *Retaining screws*
2. *Oil sump cover*
3. *Gasket*

4. Remove and clean engine oil strainers.

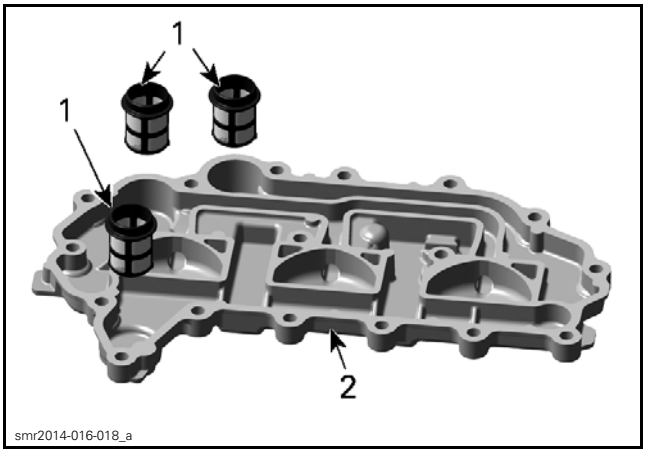

1. *Engine oil strainers*
2. *Oil sump cover*

Oil Sump Cover Inspection

Clean oil sump cover and engine oil strainers with a part cleaner, then use an air gun to dry it.

Blow out the oil orifices and check if they are not clogged.

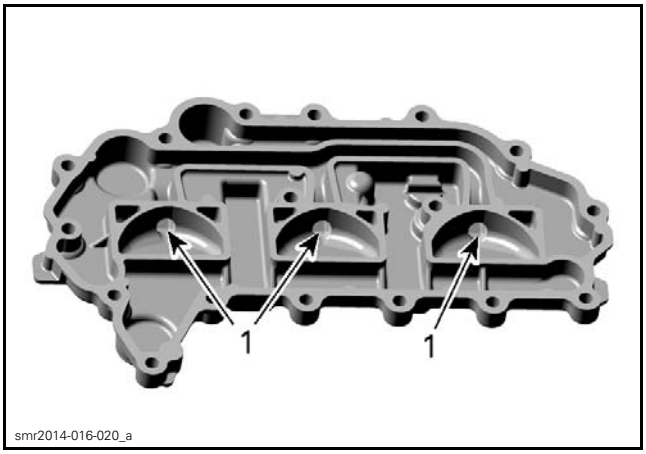

1. *Oil drain bores*

Check oil sump cover for cracks or other damage.

Check oil sump cover for flatness with straight edge.

Replace oil sump cover if necessary.

Check engine oil strainers for damage and change if necessary.

Oil Sump Cover Installation

1. Install a **NEW** oil sump cover gasket.
2. Install the strainers as shown.

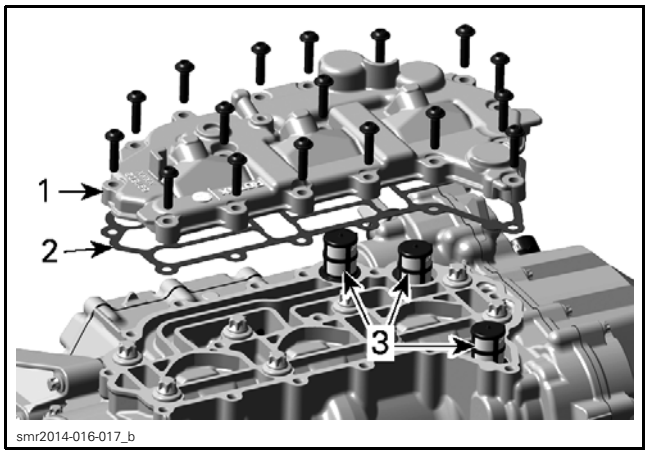

1. *Oil sump cover*
2. *Gasket*
3. *Engine oil strainers*

3. Install the oil sump cover on the engine, then tighten screws in two steps as follows:

   3.1 Tighten the following screws to the specified torque and sequence.

OIL SUMP COVER SCREWS TIGHTENING TORQUE (FOLLOW SEQUENCE)	
STEP A	5 N•m ± 0.6 N•m (44 lbf•**in** ± 5 lbf•**in**)

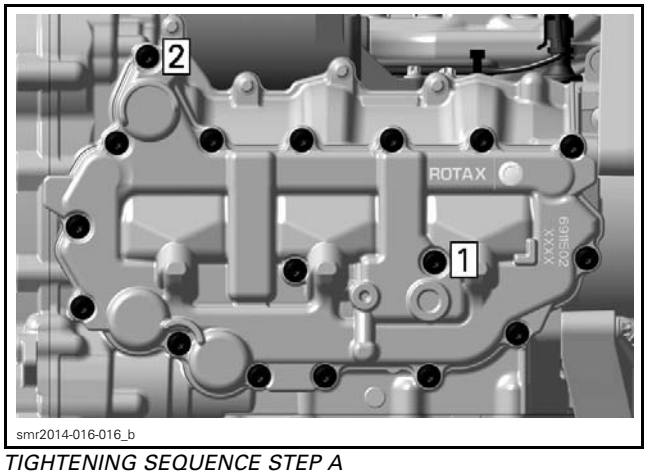

TIGHTENING SEQUENCE STEP A

   3.2 Tighten the following screws to the specified torque and sequence.

OIL SUMP COVER SCREWS TIGHTENING TORQUE (FOLLOW SEQUENCE)	
STEP B	
	9 N•m ± 1 N•m (80 lbf•**in** ± 9 lbf•**in**)

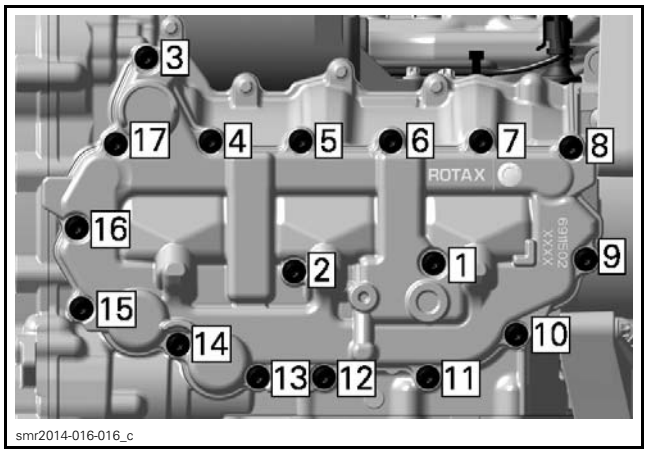

TIGHTENING SEQUENCE STEP B

4. Install engine in vehicle. Refer to *ENGINE REMOVAL AND INSTALLATION* subsection.
5. Fill up oil tank and check oil level. Refer to *PERIODIC MAINTENANCE PROCEDURES* subsection.